Final Exam

Exam Seat #

Problem	1	2	3	4	5	6	7	8	9	10	Total
Points											
Out of	12	10	12	10	10	12	12	12	10	10	110

Duration: 120 minutes

Full Name	Student Number	Signature
SOLUTIONS		

Rules:

- In all of the questions in this exam, explain your answers by showing the steps of the derivation in a clear, organized fashion. You might get no points for correct answers with no derivation and/or no explanation and/or unintelligible/unorganized solution.
- All unauthorized materials (textbooks, notes, electronic devises, bags, etc.) and, in particular, **ALL mobile phones** must be switched off and must be kept away.
- If one of the proctors suspects you of communicating with with one of your fellow students or other ways of cheating, you will be immediately removed from the exam room and your grade will be zero.
- Leaving classroom in the middle of the exam is not allowed. You can submit your sheet and leave early if you want to.
- Do not tear off any of the sheets.

Frequently used Taylor series at $x = 0$

$\frac{1}{1-x}$	$= 1 + x + x^2 + x^3 + x^4 + \cdots$	$= \sum_{n=0}^{\infty} x^n$	$x \in (-1, 1)$
e^x	$= 1 + x + \frac{x^2}{2!} + \frac{x^3}{3!} + \frac{x^4}{4!} + \cdots$	$= \sum_{n=0}^{\infty} \frac{x^n}{n!}$	$x \in \mathbb{R}$
$\cos x$	$= 1 - \frac{x^2}{2!} + \frac{x^4}{4!} - \frac{x^6}{6!} + \frac{x^8}{8!} + \cdots$	$= \sum_{n=0}^{\infty} (-1)^n \frac{x^{2n}}{(2n)!}$	$x \in \mathbb{R}$
$\sin x$	$= x - \frac{x^3}{3!} + \frac{x^5}{5!} - \frac{x^7}{7!} + \frac{x^9}{9!} - \cdots$	$= \sum_{n=0}^{\infty} (-1)^n \frac{x^{2n+1}}{(2n+1)!}$	$x \in \mathbb{R}$
$\ln(1 + x)$	$= x - \frac{x^2}{2} + \frac{x^3}{3} - \frac{x^4}{4} + \frac{x^5}{5} - \cdots$	$= \sum_{n=1}^{\infty} (-1)^{n+1} \frac{x^n}{n}$	$x \in (-1, 1]$
$\arctan x$	$= x - \frac{x^3}{3} + \frac{x^5}{5} - \frac{x^7}{7} + \frac{x^9}{9} - \cdots$	$= \sum_{n=0}^{\infty} (-1)^n \frac{x^{2n+1}}{(2n+1)}$	$x \in [-1, 1]$

I II

1. Find the area of the region which lies inside the circle $x^2+(y-1)^2=1$ but outside the circle $x^2+y^2=1$.

- Equation of circle I : $x^2+(y-1)^2=1$

$$\Rightarrow (r\cos\theta)^2+(r\sin\theta-1)^2=1$$

$$\Rightarrow r=2\sin\theta \quad 3$$

- Equation of circle II : $x^2+y^2=1$

$$\Rightarrow r=1 \quad 1$$

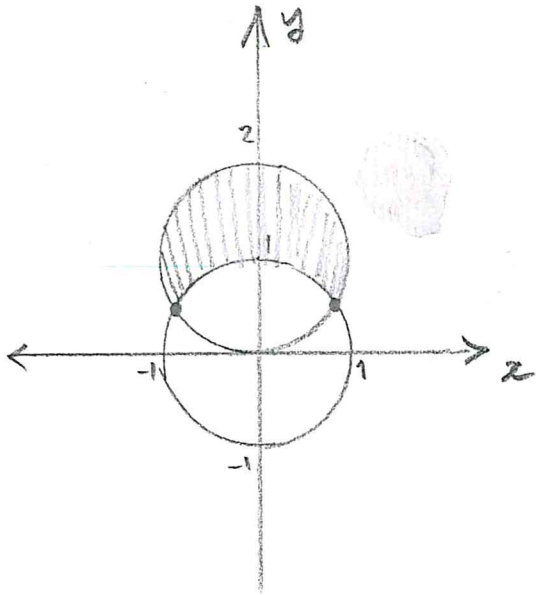

The curves intersect when

$$r=1=2\sin\theta$$

$$\Rightarrow \theta=\frac{\pi}{6} \text{ and } \theta=\frac{5\pi}{6}$$

1 1

$$\text{Area} \overset{3}{=} \int_{\frac{\pi}{6}}^{\frac{5\pi}{6}}\int_{1}^{2\sin\theta} r\,dr\,d\theta = \int_{\frac{\pi}{6}}^{\frac{5\pi}{6}}\left(2\sin^2\theta-\frac{1}{2}\right)d\theta$$

$$= \int_{\frac{\pi}{6}}^{\frac{5\pi}{6}}\left(\frac{1}{2}-\cos 2\theta\right)d\theta = \frac{\pi}{3}+\frac{\sqrt{3}}{2} \quad 3$$

2. Evaluate the double integral

$$\int_0^1 \int_0^y xy\,dxdy + \int_1^2 \int_0^{2-y} xy\,dxdy = \iint_R xy\,dA$$

by reversing the order of integration.

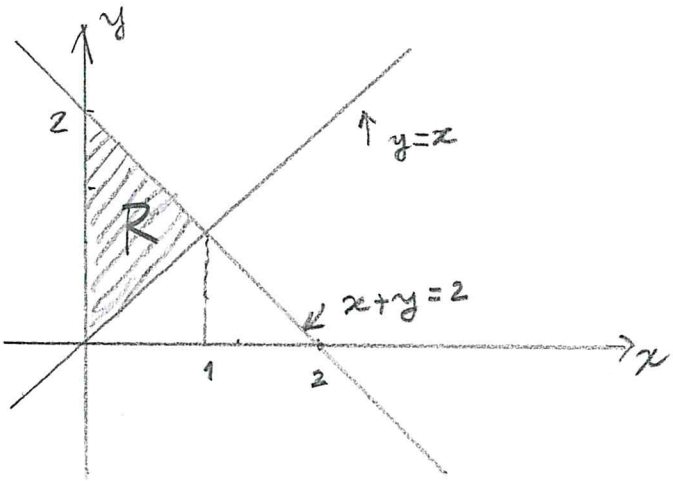

$$\iint_R xy\,dA = \int_0^1 \int_x^{2-x} xy\,dy\,dx = \int_0^1 \frac{x}{2}\left((2-x)^2 - x^2\right) dx$$

7

$$= x^2 - \frac{2}{3}x^3 \Big|_0^1$$

3

$$= \frac{1}{3}$$

3. Write three iterated triple integrals for the volume of the tetrahedron cut from the first octant by the plane $x + 4y + 2z = 8$ in the order of (a) $dzdxdy$, (b) $dxdzdy$, and (c) $dydzdx$. Do not evaluate the integrals.

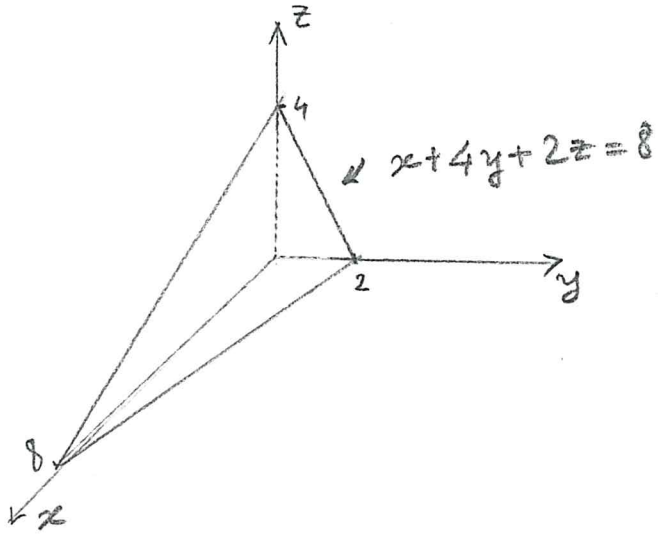

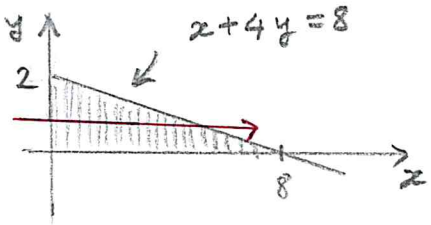

4 (a) Surface eqn : $z = \dfrac{8-x-4y}{2}$

$$V = \int_0^2 \int_0^{8-4y} \int_0^{4-\frac{x}{2}-2y} 1 \, dz\,dx\,dy$$

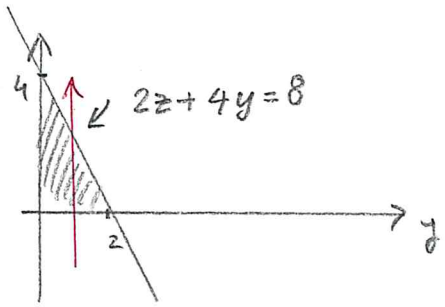

4 (b) Surface eqn : $x = 8 - 4y - 2z$

$$V = \int_0^2 \int_0^{4-2y} \int_0^{8-4y-2z} 1 \, dx\,dz\,dy$$

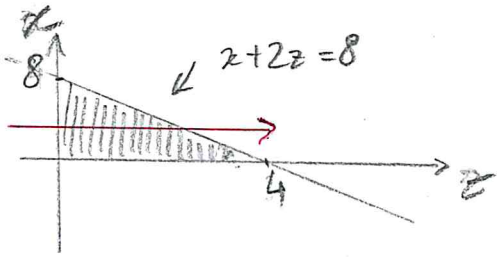

4 (c) Surface eqn : $y = \dfrac{8-2z-x}{4}$

$$V = \int_0^8 \int_0^{4-\frac{x}{2}} \int_0^{2-\frac{z}{2}-\frac{x}{4}} 1 \, dy\,dz\,dx$$

4. Discuss the convergence/divergence of the series

(a) $\displaystyle\sum_{n=3}^{\infty} \frac{1}{n \ln n (\ln \ln n)^2}$ (b) $\displaystyle\sum_{n=1}^{\infty} \frac{1}{1+2+\cdots+n}$

(a) The function $f(x) = \dfrac{1}{x \ln x (\ln \ln x)^2}$ is positive, 1

continuous and decreasing for $x \geq 3$. Hence, the series converges if $\displaystyle\int_3^{\infty} f(x)\,dx$ converges.

$$\int_3^{\infty} f(x)\,dx = \int_3^{\infty} \frac{1}{x \ln x (\ln \ln x)^2}\,dx \overset{3}{=} \int_{\ln\ln 3}^{\infty} \frac{du}{u^2}$$ which is convergent (p-test for integrals $p=2$)

Therefore, the series converges by the integral test. 1

(b) First, observe that $1+2+\cdots+n = \dfrac{n(n+1)}{2}$ and that

$$\sum_{n=1}^{\infty} \frac{1}{1+2+\cdots+n} \overset{2}{=} \sum_{n=1}^{\infty} \frac{2}{n^2+n}.$$

Let $a_n = \dfrac{2}{n^2+n} \overset{2}{\leq} \dfrac{2}{n^2} = b_n$. Since $\sum b_n$ converges,

so does $\sum a_n$ by the comparison test. 1

<u>OR</u> Let $a_n = \dfrac{2}{n^2+n} \simeq \dfrac{2}{n^2} = b_n$ for large n,

since $\sum b_n$ converges, so does $\sum a_n$ by the limit comparison test

5. Does the series

(a) $\displaystyle\sum_{n=1}^{\infty} \frac{\cos n}{n^2+\sqrt{n}}$ (b) $\displaystyle\sum_{n=2}^{\infty} (-1)^{n+1}\frac{\ln n}{n}$

converge absolutely, converge conditionally, or diverge?

(a) Note that $|\cos n| \leq 1$ for all n, so

$$\left|\frac{\cos n}{n^2+\sqrt{n}}\right| = \frac{|\cos n|}{n^2+\sqrt{n}} \overset{1}{\leq} \frac{1}{n^2+\sqrt{n}} < \frac{1}{n^2} \quad \text{for all } n$$

Therefore, $$\sum_{n=1}^{\infty}\left|\frac{\cos n}{n^2+\sqrt{n}}\right| \overset{1}{<} \sum_{n=1}^{\infty}\frac{1}{n^2}.$$

Since the series on the right converges, 1 $\displaystyle\sum_{n=1}^{\infty}\frac{\cos n}{n^2+\sqrt{n}}$ 2 converges absolutely by the Comp. Test

(b) Let $u_n = \dfrac{\ln n}{n}$. Observe that u_n's are decreasing 1

since $\dfrac{d}{dx}\dfrac{\ln x}{x} = \dfrac{1-\ln x}{x^2} < 0$ for $x>e$ and also

1 $\displaystyle\lim_{n\to\infty} u_n = \lim_{n\to\infty}\frac{\ln n}{n} = 0.$

Hence, the series converges by the alternating series test 1

But, since $\displaystyle\sum_{n=2}^{\infty}|(-1)^n u_n| = \sum_{n=2}^{\infty}\frac{\ln n}{n}$ diverges 1 (by the integral test)

the series $\displaystyle\sum_{n=2}^{\infty}(-1)^{n+1}\frac{\ln n}{n}$ converges conditionally 1

6. Find the sum of the infinite series $\sum_{n=3}^{\infty} \frac{4}{4n^2 - 12n + 5}$. (Hint: Consider its partial sums.)

Use partial fractions $\frac{4}{4n^2-12n+5} = \frac{4}{(2n-1)(2n-5)} = \frac{A}{2n-1} + \frac{B}{2n-5}$

$\Rightarrow \quad 4 = A(2n-5) + B(2n-1)$

$\Rightarrow \quad A \overset{1}{=} -1$ and $B \overset{1}{=} 1$

So the general term becomes $a_n \overset{2}{=} \frac{1}{2n-5} - \frac{1}{2n-1}$

The N'th partial sum of the series is $S_N = a_3 + a_4 + \cdots + a_N$

$\Rightarrow S_N \overset{2}{=} \left(1 - \frac{1}{5}\right) + \left(\frac{1}{3} - \frac{1}{7}\right) + \left(\frac{1}{5} - \frac{1}{9}\right) + \cdots + \left(\frac{1}{2N-5} - \frac{1}{2N-1}\right)$

$\overset{2}{=} 1 + \frac{1}{3} - \frac{1}{2N-3} - \frac{1}{2N-1}$ which is a telescoping series

and $\sum_{n=3}^{\infty} \frac{4}{4n^2-12n+5} \overset{1}{=} \lim_{N\to\infty} S_N = 1 + \frac{1}{3} \overset{3}{=} \frac{4}{3}$.

7. Find the first three non-zero terms of the Taylor series for $f(x) = \dfrac{\cos x + e^{-x^2}}{1 - x^2}$ at $x = 0$ and use this result to compute $\lim\limits_{x \to 0} \dfrac{f(x) - 2}{x^2}$.

Using the Taylor series of e^x and $1/1-x$, we obtain

$$e^{-x^2} = 1 + (-x^2) + \frac{(-x^2)^2}{2!} + \dots = 1 - x^2 + \frac{x^4}{2!} + \dots \quad 2$$

and $$\frac{1}{1-x^2} = 1 + (x^2) + (x^2)^2 + \dots = 1 + x^2 + x^4 + \dots \quad 2$$

$$\Rightarrow f(x) = \left[\left(1 - \frac{x^2}{2} + \frac{x^4}{24} + \dots\right) + \left(1 - x^2 + \frac{x^4}{2} - \dots\right)\right] \cdot \left(1 + x^2 + x^4 + \dots\right)$$

$$\overset{2}{=} \left(2 - \frac{3}{2}x^2 + \frac{13}{24}x^4 - \dots\right) \cdot \left(1 + x^2 + x^4 + \dots\right)$$

$$\overset{2}{=} 2 + \frac{1}{2}x^2 + \frac{25}{24}x^4 + \dots$$

Hence, $$\lim_{x \to 0} \frac{f(x) - 2}{x^2} \overset{3}{=} \lim_{x \to 0} \left(\frac{1}{2} + \frac{25}{24}x^2 + \dots\right) \overset{1}{=} \frac{1}{2}$$

8. For what values x does $\sum_{n=1}^{\infty} \frac{2^n(x-e)^n}{ne^n}$ converge? Give your reasons.

Let $a_n = \frac{2^n(x-e)^n}{ne^n}$ and compute $\lim_{n\to\infty} \left|\frac{a_{n+1}}{a_n}\right|$.

$$\lim_{n\to\infty}\left|\frac{a_{n+1}}{a_n}\right| \overset{1}{=} \lim_{n\to\infty}\left|\frac{\frac{2^{n+1}(x-e)^{n+1}}{(n+1)e^{n+1}}}{\frac{2^n(x-e)^n}{n\cdot e^n}}\right| = \lim_{n\to\infty}\frac{2}{e}\frac{n}{n+1}|x-e| = \frac{2}{e}|x-e| \quad 3$$

The series $\sum_{n=1}^{\infty} a_n$ converges absolutely if $\frac{2}{e}|x-e| < 1$.

That is; $|x-e| < \frac{e}{2} \Rightarrow \frac{e}{2} < x < \frac{3e}{2}$. 2

Check the endpoints $x=\frac{3e}{2}$ and $x=\frac{e}{2}$.

2 $x=\frac{3e}{2} \Rightarrow \sum_{n=1}^{\infty} a_n = \sum_{n=1}^{\infty}\frac{1}{n}$ which is divergent (Harmonic series)

2 $x=\frac{e}{2} \Rightarrow \sum_{n=1}^{\infty} a_n = \sum_{n=1}^{\infty}\frac{(-1)^n}{n}$ which is conditionally convergent (Alternating harmonic series)

Therefore, the series $\sum_{n=1}^{\infty} a_n$ converges for $x \in \left[\frac{e}{2}, \frac{3e}{2}\right)$ 1

9. Decide whether each of the following statements is True or False. Explain your reasoning.

2

(a) If $\sum_{n=1}^{\infty} |a_n|$ diverges, then $\sum_{n=1}^{\infty} a_n$ diverges. FALSE

Let $a_n = \frac{(-1)^n}{n}$. Then $\sum_{n=1}^{\infty} |a_n| = \sum_{n=1}^{\infty} \frac{1}{n}$ diverges

but $\sum_{n=1}^{\infty} a_n = \sum_{n=1}^{\infty} \frac{(-1)^n}{n}$ converges

2

(b) If $\lim_{n\to\infty} a_n = 0$, then the series $\sum_{n=1}^{\infty} a_n$ converges. FALSE

Let $a_n = \frac{1}{n}$. Then $\lim_{n\to\infty} a_n = \lim_{n\to\infty} \frac{1}{n} = 0$

but $\sum_{n=1}^{\infty} a_n = \sum_{n=1}^{\infty} \frac{1}{n}$ diverges.

2

(c) If $\sum_{n=1}^{\infty} a_n$ and $\sum_{n=1}^{\infty} b_n$ both diverge, then $\sum_{n=1}^{\infty}(a_n + b_n)$ diverges. FALSE

Let $a_n = (-1)^n$ and $b_n = (-1)^{n+1}$

Then $\sum_{n=1}^{\infty} a_n = \sum_{n=1}^{\infty} (-1)^n$ and $\sum_{n=1}^{\infty} b_n = \sum_{n=1}^{\infty} (-1)^{n+1}$ both diverge

but $\sum a_n + b_n = \sum 0 = 0$ converges.

2

(d) If $a_n > 0$ for each n and $\sum_{n=1}^{\infty} a_n$ diverges, then $\sum_{n=1}^{\infty} a_n^2$ diverges. FALSE

Let $a_n = \frac{1}{n}$. Then $\sum_{n=1}^{\infty} a_n = \sum_{n=1}^{\infty} \frac{1}{n}$ diverges

but $\sum_{n=1}^{\infty} a_n^2 = \sum_{n=1}^{\infty} \frac{1}{n^2}$ converges.

2

(e) If $\sum_{n=1}^{\infty} a_n$ converges, then $\lim_{n\to\infty} |a_{n+1}|/|a_n| < 1$. FALSE

Let $a_n = \frac{1}{n^2}$. Then $\sum_{n=1}^{\infty} a_n = \sum_{n=1}^{\infty} \frac{1}{n^2}$ converges

but $\lim_{n\to\infty} \left| \frac{a_{n+1}}{a_n} \right| = 1$.

10. (Bonus) There are several tests used to determine whether or not a positive series converges or diverges when the ratio test comes up inconclusive. An extension of the ratio test, which is due to the Swiss mathematician Joseph Ludwig Raabe (1801-1859), is given below.

Raabe's Test: Let $\sum a_n$ be a series of positive terms and define

$$\rho = \lim_{n\to\infty} n\left(1 - \frac{a_{n+1}}{a_n}\right).$$

Then **(a)** the series converges if $\rho > 1$, **(b)** the series diverges if $\rho < 1$, and **(c)** the test is inconclusive if $\rho = 1$.

Investigate the convergence of the series $\displaystyle\sum_{n=0}^{\infty} \frac{n!}{x(x+1)(x+2)\cdots(x+n)}$ for $x > 0$.

Let $a_n = \dfrac{n!}{x(x+1)\cdots(x+n)} \Rightarrow \dfrac{a_{n+1}}{a_n} = \dfrac{n+1}{x+n+1}$ 2

and $\rho = \lim\limits_{n\to\infty} n.\left(1 - \dfrac{a_{n+1}}{a_n}\right) = \lim\limits_{n\to\infty} \dfrac{nx}{x+n+1} = x$ 3

The series converges if $x>1$ and diverges if $0<x<1$; and the test is inconclusive if $x=1$.

But when $\underline{x=1}$, we have $\displaystyle\sum_{n=0}^{\infty} a_n = \sum_{n=0}^{\infty} \frac{n!}{1.2.3\ldots(1+n)}$

$$= \sum_{n=0}^{\infty} \frac{n!}{(n+1)!} = \sum_{n=0}^{\infty} \frac{1}{n+1}$$

which is divergent. 2

Therefore, the series $\displaystyle\sum_{n=0}^{\infty} a_n$ converges for $x \in (1, \infty)$

and diverges for $x \in (0, 1]$ 3